air tools

PARTS LIST

■ *Scaling Hammer*
【Model】S2

株式会社中谷機械製作所
NAKATANI KIKAI CO.,LTD.
MADE IN JAPAN

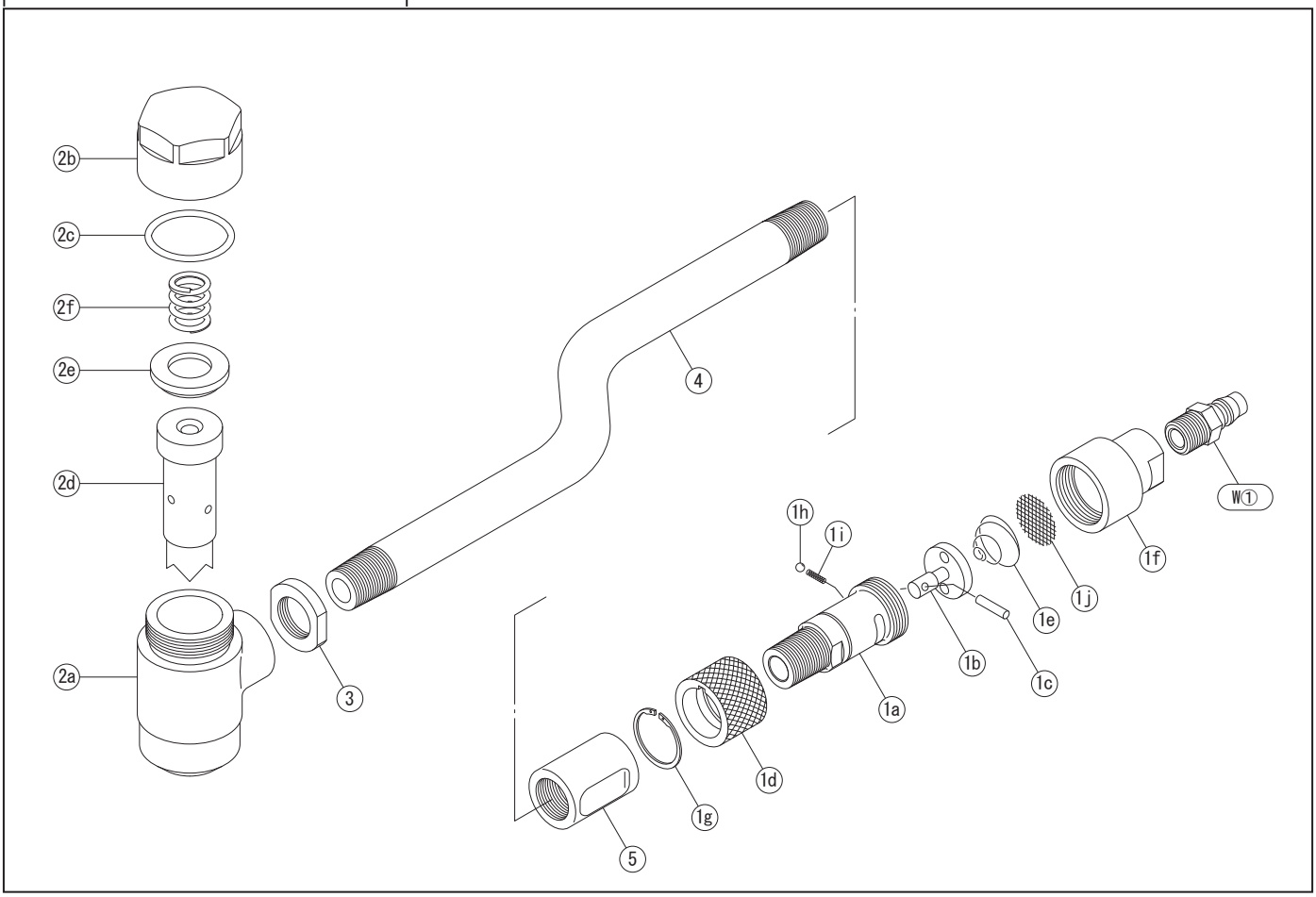

No.	Code	Name Of Part	Q'ty			No.	Code	Name Of Part	Q'ty		
1	C4501	Throttle Body Assy	1								
1a	4501	Throttle Body	1								
1b	7302	Throttle Valve	1								
1c	9516	Throttle Valve Pin 4*17.8	1								
1d	4502	Throttle Handle	1								
1e	9232	Throttle Spring	1								
1f	7308	Hose Joint	1								
1g	9701	Snap Ring ISTW25	1								
1h	9450	Steel Ball 4mm	1								
1i	9200	Spring 3.7*6	1								
1j	9781	Strainer 26(0.8)	1								
2	C4702	Cylinder Assy	1								
2a	4702	Cylinder	1								
2b	4703	Cylinder Head	1								
2c	9432	O-Ring G-35	1								
2d	4705	Piston	1								
2e	4706	Valve Cap	1								
2f	9208	Spring 19*20	1								
3	4512	Lock Nut (P.T.1/2)	1								
4	4709	Pipe	1								
5	9140	Socket (1/2)	1								
W①	9106	Coupling PM23	1								