air tools

PARTS LIST

■ *Flux Chipper*
【Model】F2

株式会社中谷機械製作所
NAKATANI KIKAI CO.,LTD.
MADE IN JAPAN

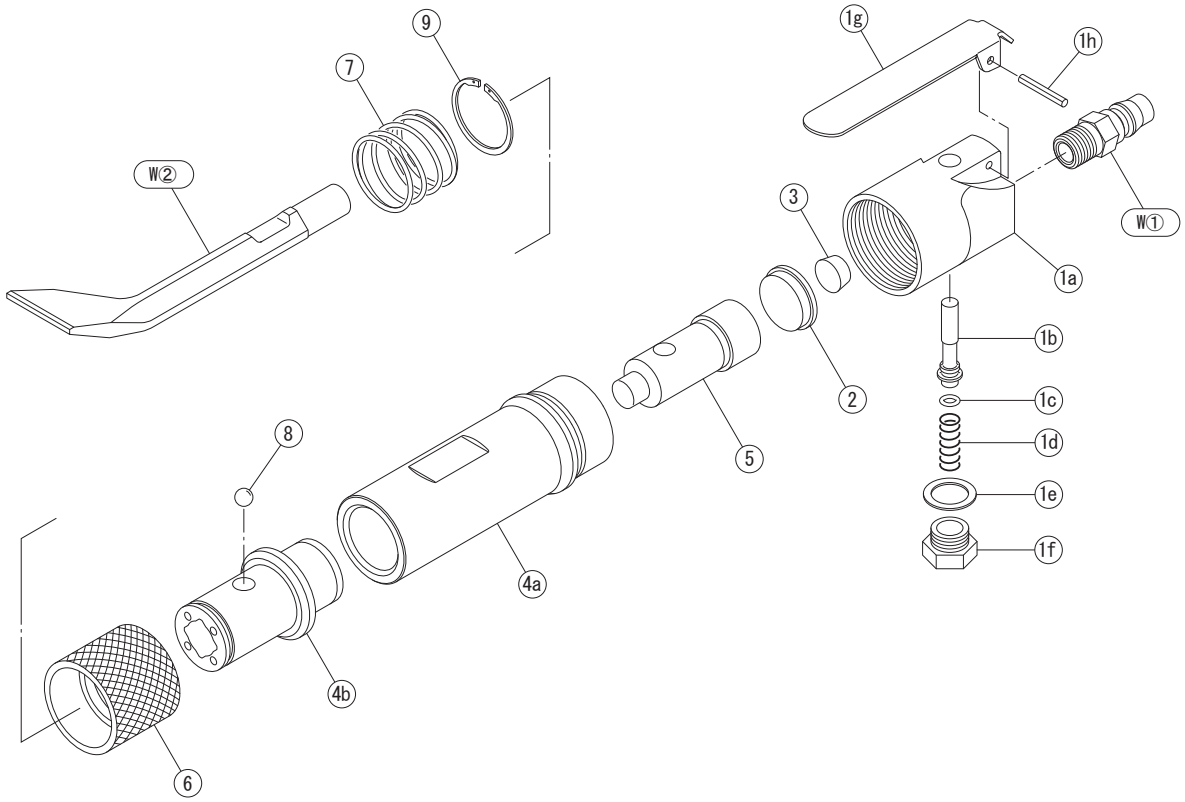

No.	Code	Name Of Part		Q'ty			No.	Code	Name Of Part		Q'ty		
1	C4201	Throttle Body Assy		1									
1a	4201	Throttle Body		1									
1b	4103	Throttle Rod		1									
1c	9400	O-Ring	P-4	1									
1d	9230	Throttle Spring		1									
1e	9736	Gasket	14*20*1	1									
1f	4106	Throttle Cap		1									
1g	4108	Throttle Lever		1									
1h	9552	Spring Pin	3*22	1									
2	4202	Cylinder Cap		1									
3	4111	Damper		1									
4	C4203	Cylinder Assy		1									
4a	4203	Cylinder		1									
4b	4204	Cylinder Bush		1									
5	4205	Piston		1									
6	4206	Sleeve		1									
7	9277	Sleeve Spring	30.5*25	1									
8	9451	Ball	5/16	1									
9	9701	Snap Ring	ISTW25	1									
W①	9105	Coupling	PM22	1									
W②	TF20000	Chisel		1									